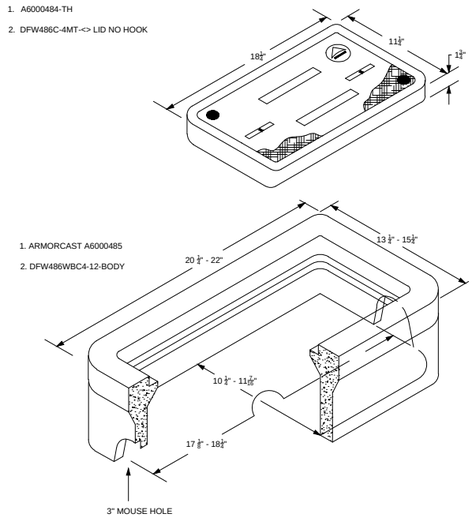

TRAFFIC COVER & BOX, TOUCH & RADIO APPLICATION - ¾" & 1" METER

DETAIL NO. - W10

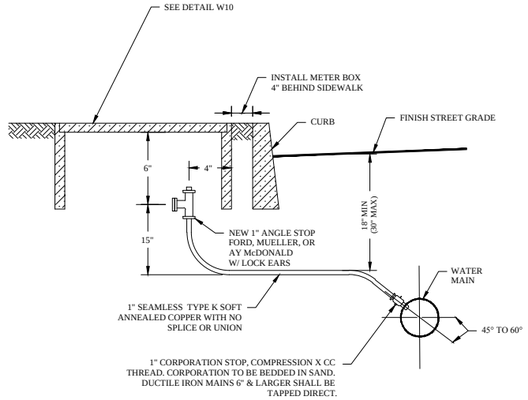

NOTES:

1. SERVICES MUST BE APPLIED FOR PRIOR TO INSTALLATION.
2. CONTRACTOR SHALL CONTACT CITY CONSTRUCTION MANAGER'S OFFICE (835-2662) 48 HOURS PRIOR TO INSTALLING ANY SERVICES.
3. CONTRACTOR IS HELD RESPONSIBLE TO AVOID CONFLICT WITH OTHER UTILITIES BY COORDINATION OF LOCATION. "ONE-CALL" 800-424-5555 OR 811.
4. NO CONNECTIONS WILL BE ALLOWED TO AN EXISTING SERVICE PRIOR TO AN APPROVED PURITY TEST. PURITY TEST SHALL PRECEDE PRESSURE TEST.
5. STUB SERVICES SHALL BE PRESSURE TESTED WITH THE MAIN LINE AND BE CAPABLE OF WITH-STANDING THE MAINS TEST PRESSURE.
6. LOCATION OF METER TO BE DETERMINED BY THE CITY.
7. STAMP 'W' ON THE CURB AT THE LOCATION THE SERVICE.

STANDARD 1" WATER SERVICE

DETAIL NO. - W20

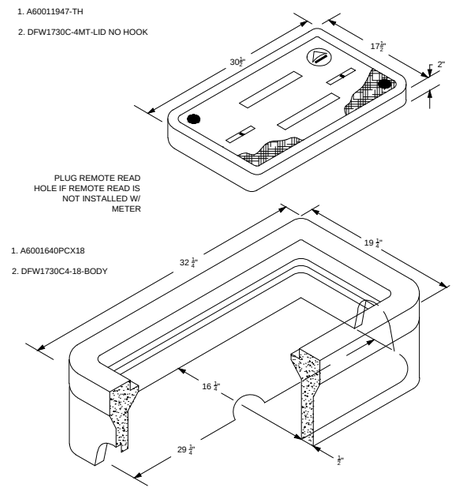

TRAFFIC COVER & BOX, TOUCH & RADIO APPLICATION - 1½" & 2" METER

DETAIL NO. - W11

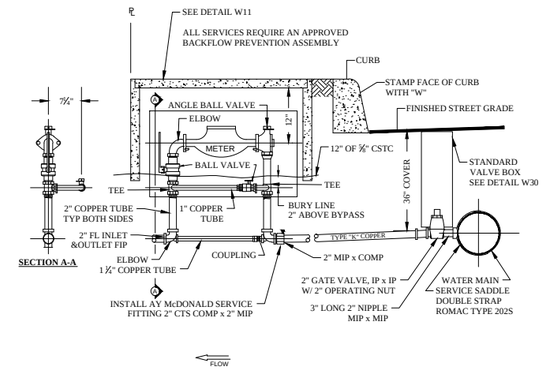

NOTES:

1. CLEARANCES:
   MIN. 5' FROM EDGE OF DRIVEWAY - NO METERS IN DRIVEWAY SECTION
   MIN. 10' FROM TREES
   MIN. 5' FROM OTHER UTILITIES, EXCEPT SEWER @ 10'
   MIN. DEPTH AT RIGHT OF WAY IS 36"
   MIN. DEPTH ON CUSTOMER SIDE IS 18"
2. CTS = COMPRESSION ON ALL BRASS & COPPER.THE SERVICE LINE SHALL BE CONTINUOUS WITHOUT COUPLINGS BETWEEN THE CORPORATION STOP AND CURB STOP VALVE UNLESS APPROVED BY THE ENGINEER.
3. NO DIRECT TAPS ALLOWED.
4. METER LOCATION TO BE DETERMINED BY THE CITY.
5. SADDLES SHALL BE DOUBLE BAND DUCTILE IRON, BRONZE, STAINLESS STEEL, OR BAND-TYPE WITH I.P. STANDARD TAPPING.
6. SERVICE PIPE SHALL BE A MINIMUM OF 2" TYPE K SOFT COPPER COMPRESSION COUPLING FOR USE IN CONNECTING PLAIN END WATER SERVICE PIPES SHALL BE APPLICABLE FOR THE TYPE OF PIPE BEING COUPLED. COMPRESSION COUPLINGS SHALL HAVE ARMORED GASKETS WHEN DIS-SIMILAR METAL PIPES ARE BEING JOINED.
7. WATER METERS SHALL NOT BE PLACED IN SIDEWALK.
8. CORPORATION STOPS AND COUPLINGS SHALL BE OF THE FOLLOWING MANUFACTURER BRANDS AND BE COMPRESSION DESIGN.
   MUELLER
   McDONALD
   FORD
9. METER BOX LIDS SHALL BE TOUCH READ APPLICATION WITH PLUG IN KNOCK-OUT.
10. ALL FITTINGS SHALL MEET SECTION 1412 SDWA.
11. METER LAYING LENGTH: 1 ½" = 13"
    2" = 17"
    PLUS ½" FOR GASKETS
12. ALL METERS SHALL READ IN ONE CUBIC FEET.
13. METER SIZE TO BE APPROVED BY THE CITY.
14. METER TO BE REMOTE READ TYPE.
15. 1 ½" METERS WILL REQUIRE 2" x 1 ½" METER FLANGE REDUCERS.
16. SETTER SHALL BE AY McDONALD #720R718WWFF 2" OR APPROVED EQUAL.

STANDARD 2" DOMESTIC WATER SERVICE

DETAIL NO. - W21

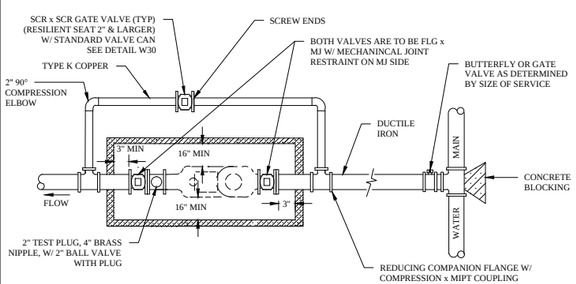

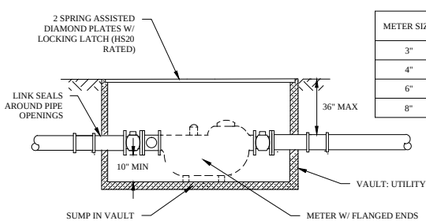

METER SIZE	BY-PASS LINE SIZE	BY-PASS MATERIAL
3"	2" MIN.	COPPER
4"	2" MIN.	COPPER
6"	4"	DI
8"	6"	DI

VAULTS SHALL BE PRE-APPROVED PRIOR TO INSTALLATION BY CITY PERSONNEL

NOTES:

1. ALL JOINTS SHALL BE RESTRAINED FROM THE MAIN LINE TEE TO PROVIDE FOR METER REMOVAL WHILE USING BY-PASS LINE.
2. PRIOR TO METER INSTALLATION, GATE VALVES SHALL BE ALIGNED & SPACED W/RIGID SPOOL. CONTACT CITY WATER DEPT. FOR DISTANCE BETWEEN METER GATE VALVES PRIOR TO INSTALLATION. (835-2662)

STANDARD 3" & LARGER METER INSTILLATION

DETAIL NO. - W22

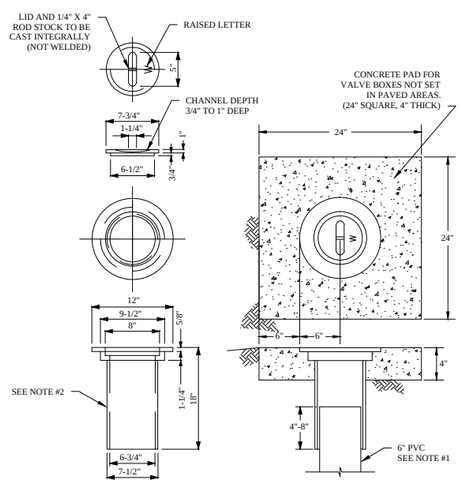

NOTES:

1. EXTENSIONS SHALL BE 6" ASTM D 3034 SDR 35 PVC PIPE (ONE PIECE)
2. VALVE BOX SHALL BE U.S. FILTER/PACIFIC WATER WORKS NO. 910 OR EQUAL.
3. THE LID SHALL INCLUDE THE FORT VANCOUVER LOGO AND "W" IN THE DESIGN.
4. IF THE ORIGIN IS OTHER THAN USA, THE COUNTRY OF ORIGIN SHALL BE CAST ON THE UNDERSIDE OF THE LID
5. THERE SHALL BE 1/2" CLEARANCE UNDER THE PIN CAST INTO THE LID.
6. THE OPERATOR NUT SHALL HAVE A DEPTH FROM 18"-36" FROM FINISH GRADE TO THE OPERATOR NUT.

STANDARD VALVE BOX & COVER

DETAIL NO. - W30

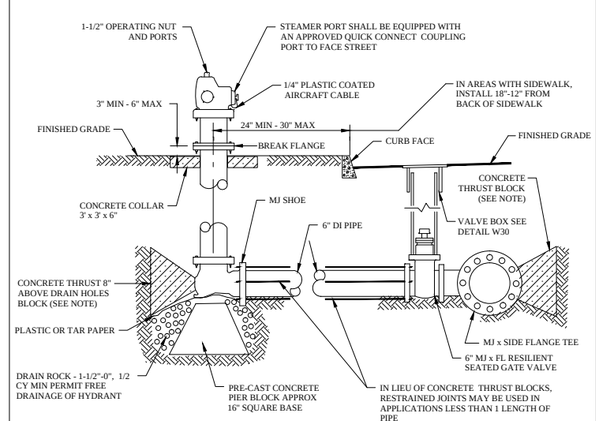

NOTES:

1. FIRE HYDRANT INSTALLATIONS SHALL BE INSPECTED PRIOR TO BACKFILLING.
2. FIRE HYDRANTS SHALL BE PAINTED (BRUSH APPLIED) AFTER INSTALLATION W/STANDARD AWWA, GLOSS B, YELLOW

APPROVED HYDRANTS
MEULLER SUPER CENTURION
CLOW MEDALLION
KENNEDY GUARDIAN

STANDARD FIRE HYDRANT ASSEMBLY

DETAIL NO. - W40

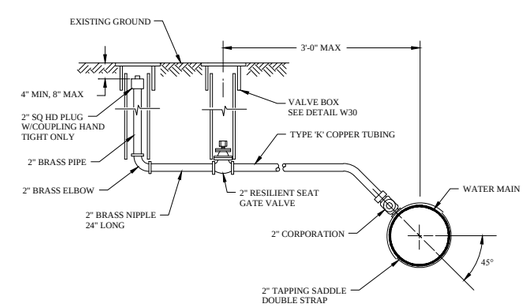

NOTE:

1. BLOW0FF SHALL BE INSTALLED 1'-0" FROM AN END OF A LINE.

STANDARD BLOWOFF ASSEMBLY

DETAIL NO. - W50

No.	Revision	By

Designed By: JV
Drawn By: JV
Reviewed By:
As Shown

STANDARD WATER DETAILS - SHEET 2

CITY OF WASHOUGAL

Drawing No.
2
2 of 4