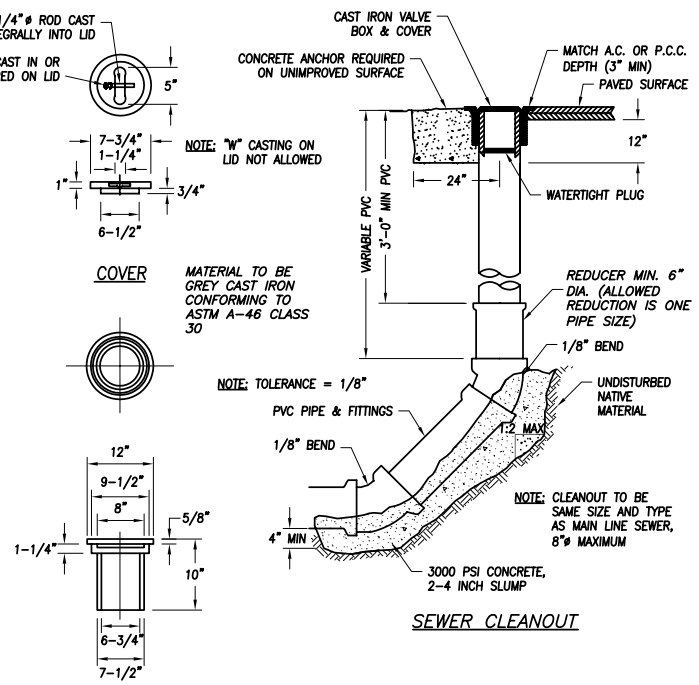

NOTE: "W" CASTING ON LID NOT ALLOWED

NOTE: TOLERANCE = 1/8"

NOTE: CLEANOUT TO BE SAME SIZE AND TYPE AS MAIN LINE SEWER, 8"ø MAXIMUM

SEWER CLEANOUT

CAST IRON VALVE BOX AND COVER

NOTES:

1. FOR 6" CLEANOUTS ONLY, USE IFCO FRAME NO. 235, AS MANUFACTURED BY INLAND FOUNDARY CO., OR APPROVED EQUAL. COVER SHALL BE THE MANUFACTURER'S STANDARD, WITH "S" OR "SEWER" CAST STAMPED ON TOP. INSTALL MECHANICAL PLUGS ON ALL CLEANOUTS.

STANDARD SEWER CLEANOUT

NTS

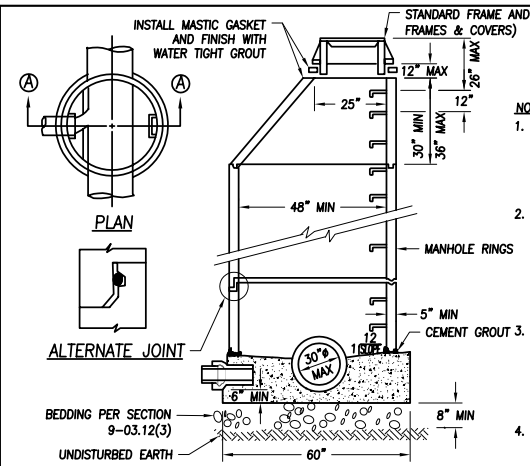

SECTION A-A CAST IN PLACE BASE

NOTES:

1. ALL PRECAST MANHOLE RINGS AND CONES SHALL CONFORM TO ASTM C-478 WITH CAST IN STEPS. SEE MANHOLE STEP DETAILS.
2. IN OVER EXCAVATED AREAS PROVIDE SUPPORT FOR THE PIPE AS FOLLOWS: PLACE 3/4" MINUS CRUSHED ROCK OVER UNDISTURBED GROUND IN 6" LAYERS AND COMPACT USING HAND TAMPER.
3. WHERE SEWER CROSSES OVER THE WATERMAIN, ONE FULL LENGTH OF DUCTILE IRON PIPE SHALL BE USED WITH THE PIPES CENTERED FOR MAXIMUM JOINT SEPARATION.
4. CAST-IN-PLACE, MONOLITHIC MANHOLE MAY BE SUBSTITUTED WITH SPECIFIC APPROVAL OF THE ENGINEER.
5. SEE STANDARD MANHOLE CONNECTION DETAILS.
6. JOINTS SHALL BE CONSTRUCTED SO AS TO BE WATERTIGHT. KENT-SEAL NO. 2 OR APPROVED EQUAL SHALL BE USED ON TONGUE & GROOVE SECTIONS, AND ON RISER RINGS PREMOLDED "O-RING" MAY BE SUBSTITUTED ON BELL & SPIGOT SECTIONS. ALL JOINTS SHALL BE GROUTED WITH NON-SHRINK CONCRETE GROUT & STRUCK EVEN WITH THE WALL.

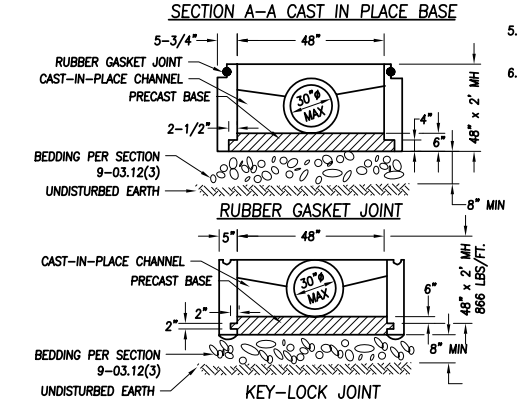

RUBBER GASKET JOINT

KEY-LOCK JOINT

PRECAST MANHOLE BASE (ALTERNATE)

STANDARD PRECAST MANHOLE

NTS

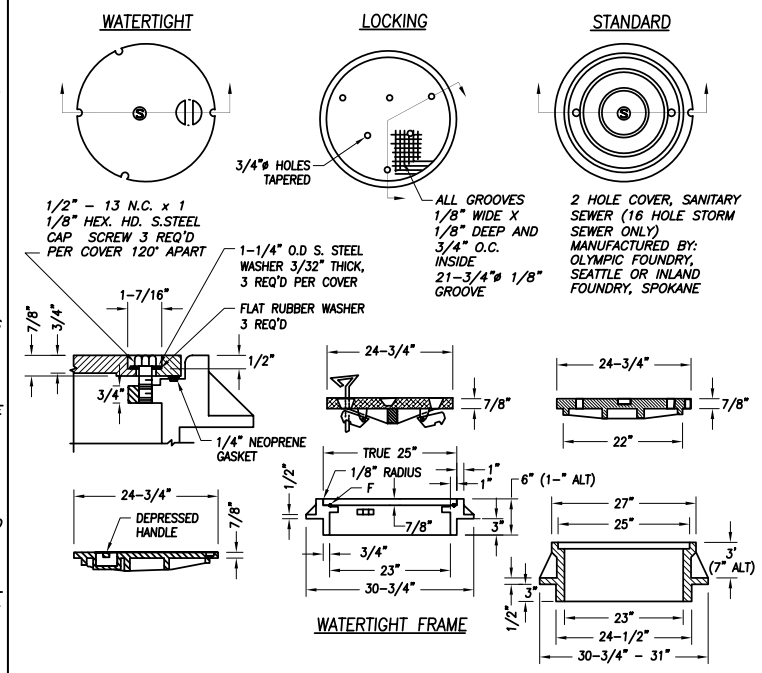

NOTES:

1. COVER & FRAME TO BE MACHINED TO A TRUE BEARING ALL AROUND. MATERIAL SHALL BE OF GREY CAST
2. IRON, A.S.T.M. A-48, CLASS 30.

STANDARD & LOCKING FRAME

STANDARD MANHOLE FRAMES & COVERS

NTS

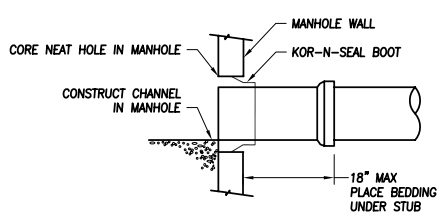

THREE TYPES OF CONNECTIONS APPROVED:

1. EXPANSION TYPE RUBBER BOOT: KOR-N-SEAL
2. CONCRETE PIPE, GROUTED WITH NON-SHRINK GROUT, IF APPROVED BY CITY.
3. GPK PVC EPOXY-SAND COATED MANHOLE ADAPTER, GROUTED WITH NON-SHRINK GROUT, ONLY IF APPROVED BY CITY.

NOTES:

1. CENTER STUB OR SLEEVE IN HOLE W/2" GROUTED SPACE ALL AROUND. CORE HOLE 4" LARGER THAN O.D. OF STUB OR SLEEVE.
2. STANDARD GROUT WILL NOT BE ACCEPTED AS A SUBSTITUTE FOR NON-SHRINK GROUT. NON-SHRINK GROUT SHALL BE FIVE STAR, SIKA 212, EUCO N-5 OR AS APPROVED.
3. STUB-OUTS INSTALLED FOR FUTURE EXTENSION ARE TO BE PLUGGED AT BOTH ENDS.

MANHOLE CONNECTION DETAILS

NTS

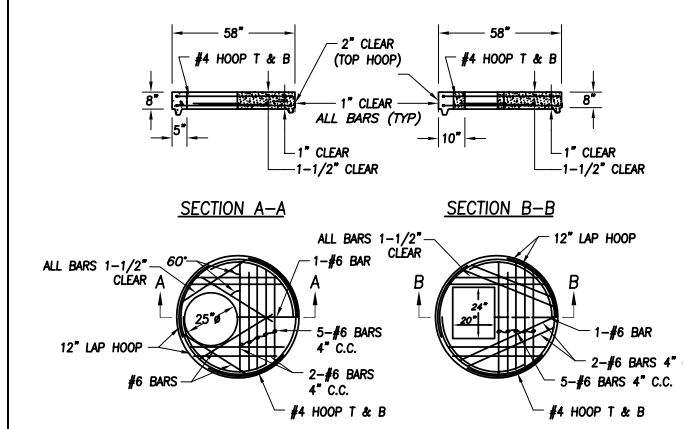

UNIT "MH"

UNIT "CB"

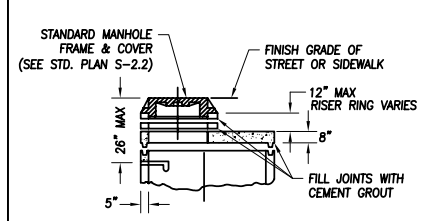

FLAT SLAB ALTERNATE

NOTES:

1. CONSTRUCTION SHALL CONFORM TO STANDARD PRECAST MANHOLE DETAIL IF NOT OTHERWISE SHOWN.
2. ALL PRECAST SECTIONS SHALL CONFORM TO THE REQUIREMENTS OF ASTM C-478. ALL POURED IN PLACE CONCRETE SHALL HAVE A 28 DAY STRENGTH OF 3000 P.S.I. & 2" TO 4" SLUMP.
3. ALL REINFORCING SHALL BE GRADE 40 STEEL.
4. MANHOLES UNDER 6'-0" IN DEPTH FROM RIM TO SHELF SHALL HAVE UNIT "MH" TOP SLAB IN LIEU OF CONE AS SHOWN ON STANDARD PRECAST MANHOLE DETAIL. UNIT "CB" TOP SLAB SHALL BE USED WHERE "TYPE 2" CATCH BASIN IS SPECIFIED. STANDARD RISER UNITS AND FRAME AND GRATE FOR CATCH BASIN SHALL BE USED IN CONJUNCTION WITH TYPE "CB" TOP SLAB.

TOP SLAB FOR STANDARD PRECAST MANHOLE

NTS

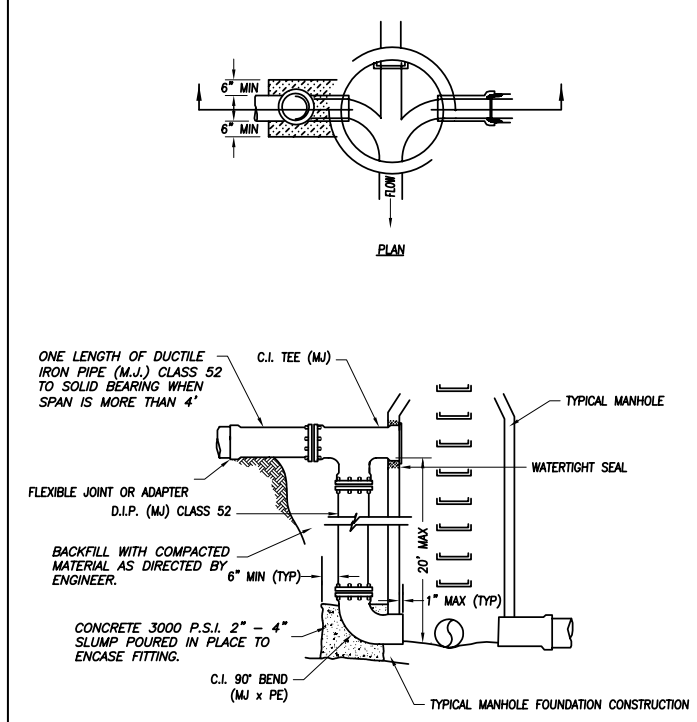

OUTSIDE DROP CONNECTION

NTS

By	APPR.	DATE	No.	REVISIONS
MBC		8/03		APPROVED (CD VERSION 1.1)
MBC		10/03		APPROVED (CD VERSION 1.2)

DESIGNED	EB/LF
DRAWN	BS
CHECKED	JG
APPROVED	MBC

SCALE: HOR. NTS; VERT. NTS; FIELD BOOK N/A

JOB NUMBER

DATE

CITY OF WASHOUGAL

STANDARD SANITARY DETAILS 2

DRAWING NUMBER

SHEET of