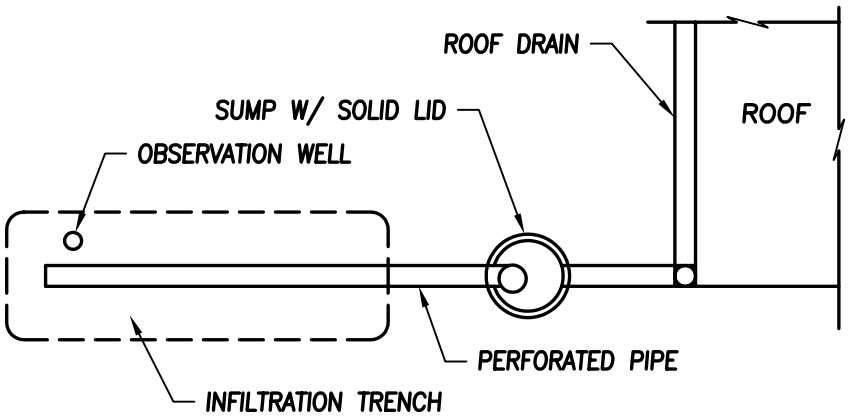

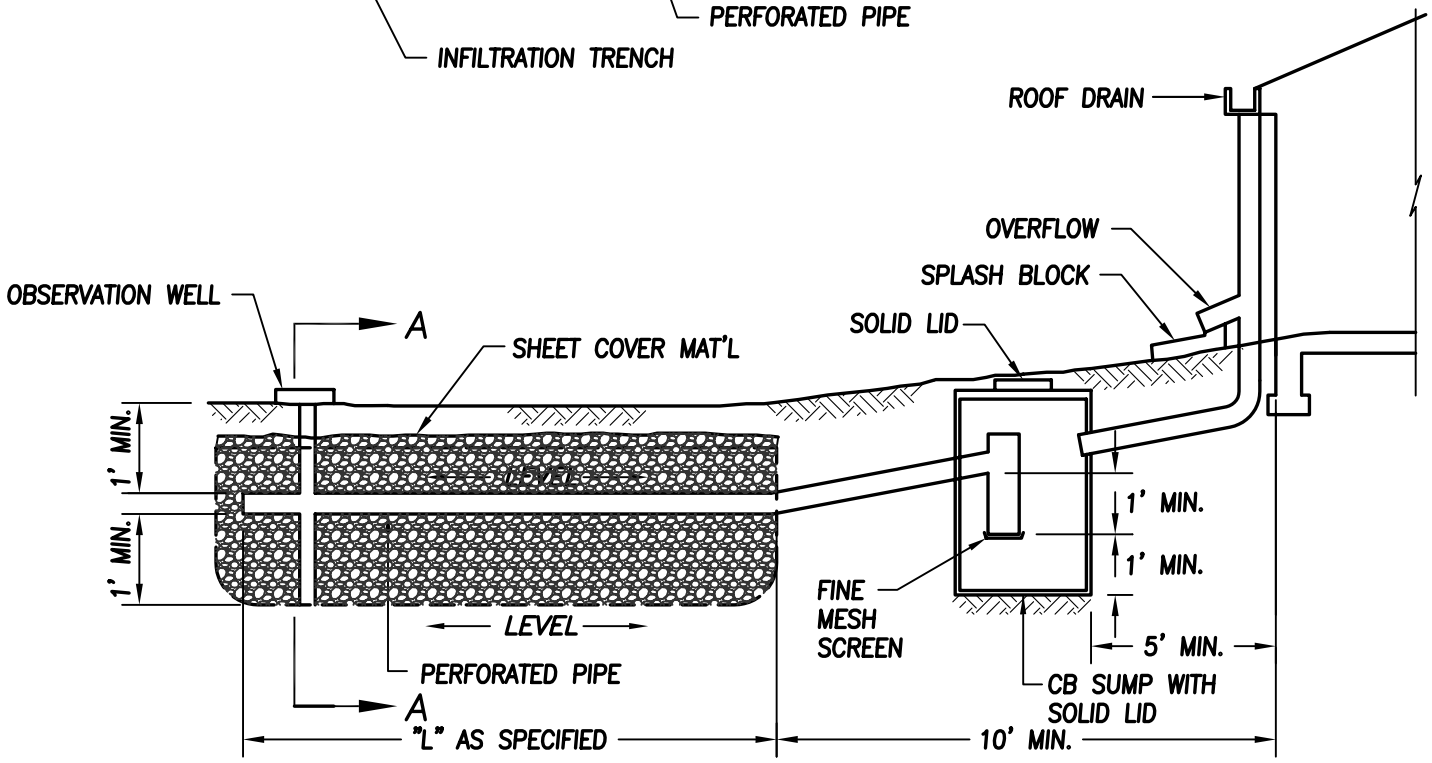

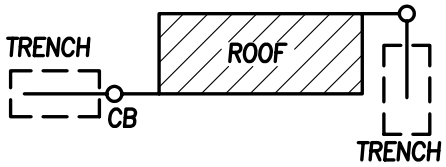

POSSIBLE ALIGNMENTS

PLAN VIEW

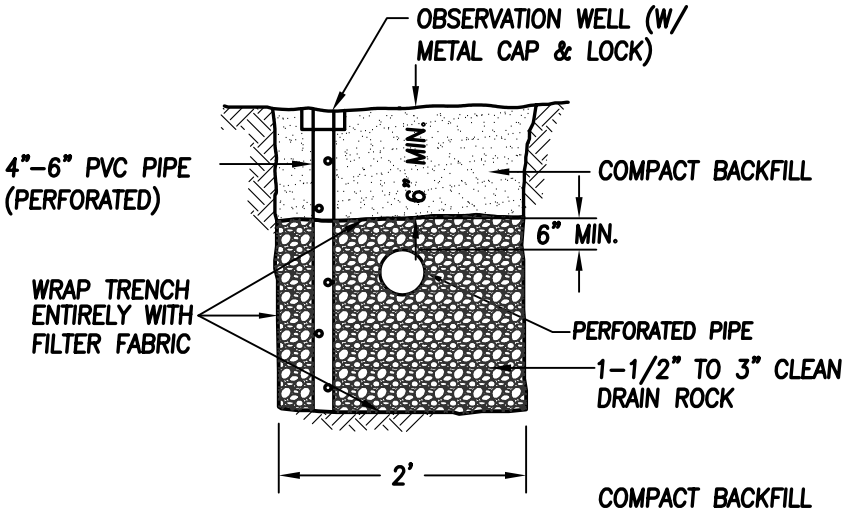

SECTION A-A

STANDARD ROOF INFILTRATION SYSTEM

NTS