STORM DRAINAGE NOTES:

1. ALL STORM DRAIN INLETS CAPABLE OF ACCEPTING STORMWATER SHALL BE STENCILED IN WHITE LETTERING WITH A BLUE 2-INCH LEGEND AS FOLLOWS:

   A) INFILTRATION SYSTEMS: "DUMP NO WASTE – DRAINS TO GROUND WATER".

   B) ALL OTHER SYSTEMS: "DUMP NO WASTE – DRAINS TO RIVER".

2. SIGNS SHALL BE INSTALLED ALONG ALL WATER QUALITY BIOFILTRATION SYSTEMS THAT READ: "WATER QUALITY FILTER – PLEASE LEAVE VEGETATED" AND AT RETENTION/DETENTION FACILITIES (AS APPLICABLE) THAT READ: "[PUBLIC/PRIVATE] STORMWATER CONTROL FACILITY".

4. VEGETATION IN BIOFILTRATION SYSTEMS SHALL BECOME FULLY ESTABLISHED PRIOR TO COMMENCING WITH INSTALLATION OF ASPHALT CONCRETE OR PORTLAND CEMENT CONCRETE PAVEMENT FOR ALL AREAS DRAINING INTO THE WATER QUALITY SYSTEM. SEED MIXTURES FOR BIOFILTRATION SHALL BE IN ACCORDANCE WITH BMP C120: TEMPORARY AND PERMANENT SEEDING AS NOTED IN THE STORMWATER MANAGEMENT MANUAL FOR WESTERN WASHINGTON, VOLUME II – CONSTRUCTION STORMWATER POLLUTION PREVENTION. SEEDING SHALL BE APPLIED AT A RATE OF 120 LBS/ACRE.

5. ALL STORM SEWER PIPE AND FITTINGS SHALL BE WATER TIGHT. ALL CONNECTIONS SHALL BE MADE WITH PREFABRICATED FITTINGS.

6. UNLESS APPROVED OTHERWISE, THE CONTRACTOR SHALL PROVIDE THE UTILITY WITH A VIDEOTAPE INSPECTION OF ALL STORM SEWERS 7 DAYS PRIOR TO PAVING. THE CONTRACTOR SHALL CORRECT ALL DEFICIENCIES FOUND DURING TELEVISION INSPECTION, AT NO COST TO THE CITY.

7. MATERIALS AND WORKMANSHIP FOR STORM SEWER WORK SHALL CONFORM TO THE CITY OF WASHOUGAL STANDARD STORM AND SANITARY SEWER DETAIL SHEETS (AS APPLICABLE).

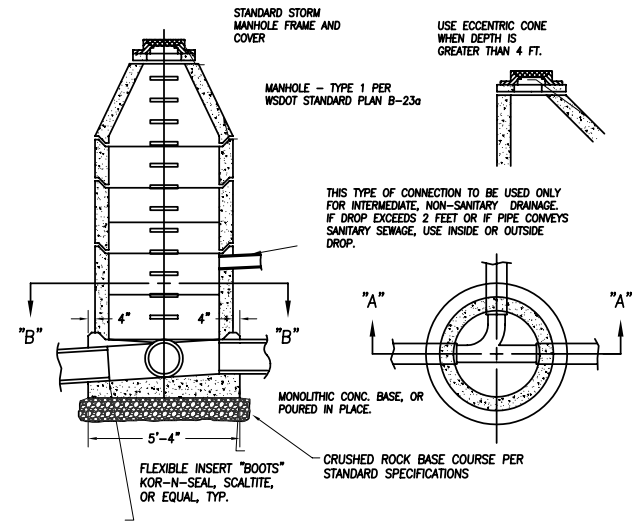

NOTES:
1. SEE STANDARD MANHOLE DETAILS FOR ADDITIONAL INFORMATION.

STANDARD STORM MANHOLE
NTS

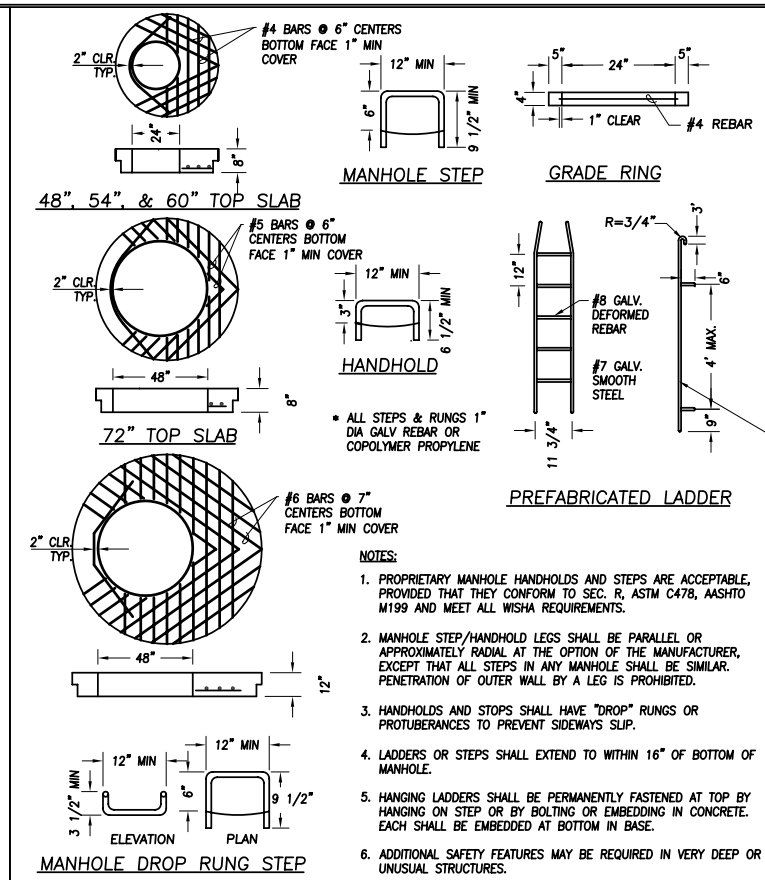

* ALL STEPS & RUNGS 1" DIA GALV REBAR OR COPOLYMER PROPYLENE

NOTES:
1. PROPRIETARY MANHOLE HANDHOLDS AND STEPS ARE ACCEPTABLE, PROVIDED THAT THEY CONFORM TO SEC. R, ASTM C478, AASHTO M199 AND MEET ALL WISHA REQUIREMENTS.
2. MANHOLE STEP/HANDHOLD LEGS SHALL BE PARALLEL OR APPROXIMATELY RADIAL AT THE OPTION OF THE MANUFACTURER, EXCEPT THAT ALL STEPS IN ANY MANHOLE SHALL BE SIMILAR. PENETRATION OF OUTER WALL BY A LEG IS PROHIBITED.
3. HANDHOLDS AND STOPS SHALL HAVE "DROP" RUNGS OR PROTUBERANCES TO PREVENT SIDEWAYS SLIP.
4. LADDERS OR STEPS SHALL EXTEND TO WITHIN 16" OF BOTTOM OF MANHOLE.
5. HANGING LADDERS SHALL BE PERMANENTLY FASTENED AT TOP BY HANGING ON STEP OR BY BOLTING OR EMBEDDING IN CONCRETE. EACH SHALL BE EMBEDDED AT BOTTOM IN BASE.
6. ADDITIONAL SAFETY FEATURES MAY BE REQUIRED IN VERY DEEP OR UNUSUAL STRUCTURES.

STANDARD MANHOLE DETAILS
NTS

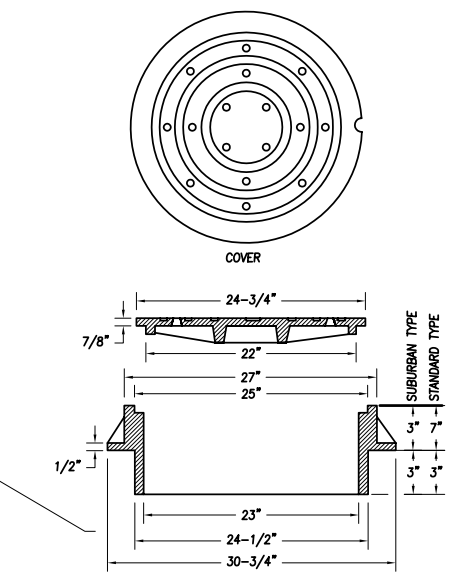

NOTES:
1. TAMPER-PROOF COVERS REQUIRED ON MANHOLES LOCATED IN UNIMPROVED AREAS.
2. COVER AND FRAME TO BE MACHINED TO A TRUE BEARING ALL AROUND.
3. FRAME MATERIAL SHALL BE GREY CAST IRON ASTM 4-48 CLASS 30.
4. COVER MATERIAL SHALL BE DUCTILE IRON ASTM A536 GRADE 80-55-06.

STANDARD STORM MANHOLE FRAME AND COVER
NTS

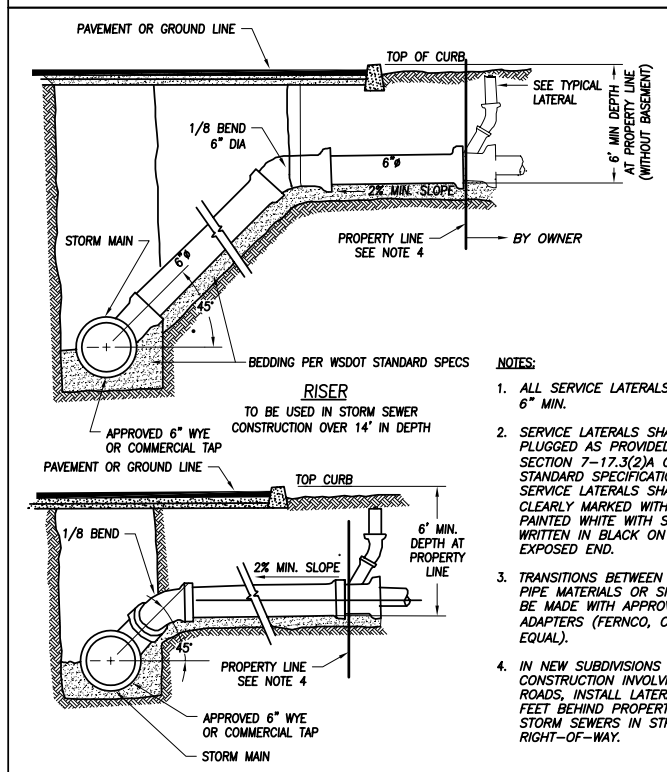

NOTES:
1. ALL SERVICE LATERALS SHALL BE 6" MIN.
2. SERVICE LATERALS SHALL BE PLUGGED AS PROVIDED BY SECTION 7-17.3(2)A OF THE STANDARD SPECIFICATIONS. SERVICE LATERALS SHALL BE CLEARLY MARKED WITH 2"x4" PAINTED WHITE WITH STORM WRITTEN IN BLACK ON THE EXPOSED END.
3. TRANSITIONS BETWEEN DISSIMILAR PIPE MATERIALS OR SIZES SHALL BE MADE WITH APPROVED ADAPTERS (FERNCO, CAULDER, OR EQUAL).
4. IN NEW SUBDIVISIONS AND OTHER CONSTRUCTION INVOLVING NEW ROADS, INSTALL LATERALS TO 6 FEET BEHIND PROPERTY LINE FOR STORM SEWERS IN STREET RIGHT-OF-WAY.

TYPICAL HOUSE BRANCH

STORM SEWER LATERAL CONNECTIONS
NTS

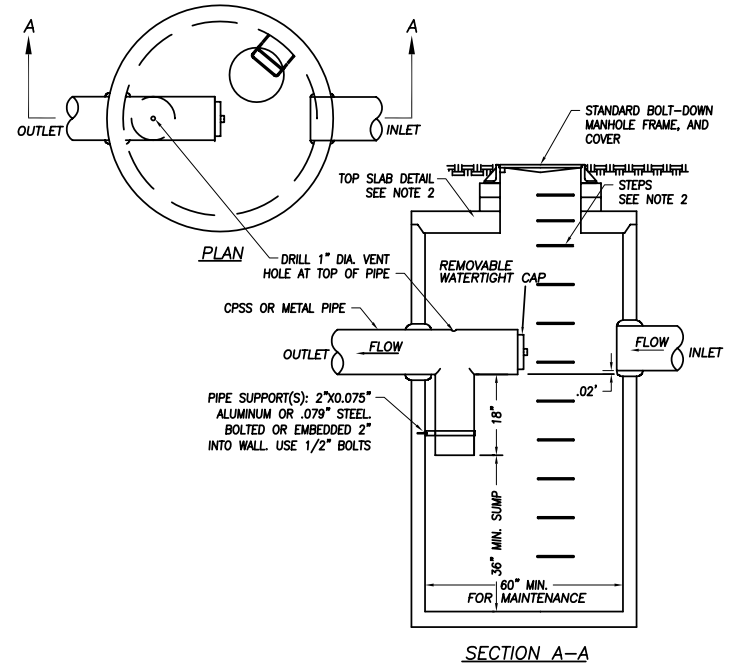

NOTES:
1. EXCEPT AS SHOWN OR NOTED, UNITS SHALL BE CONSTRUCTED IN ACCORDANCE WITH THE REQUIREMENTS FOR WSDOT CATCH BASIN TYPE 2, 60" MINIMUM DIAMETER.
2. SEE STANDARD PLAN MANHOLE DETAILS FOR ADDITIONAL INFORMATION.

SEDIMENTATION MANHOLE
NTS

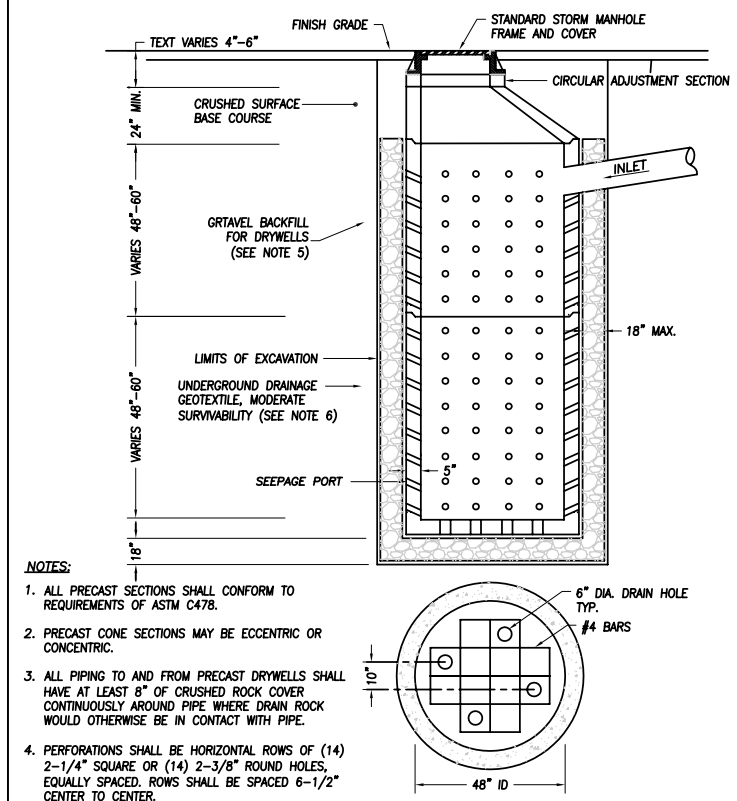

NOTES:
1. ALL PRECAST SECTIONS SHALL CONFORM TO REQUIREMENTS OF ASTM C478.
2. PRECAST CONE SECTIONS MAY BE ECCENTRIC OR CONCENTRIC.
3. ALL PIPING TO AND FROM PRECAST DRYWELLS SHALL HAVE AT LEAST 8" OF CRUSHED ROCK COVER CONTINUOUSLY AROUND PIPE WHERE DRAIN ROCK WOULD OTHERWISE BE IN CONTACT WITH PIPE.
4. PERFORATIONS SHALL BE HORIZONTAL ROWS OF (14) 2-1/4" SQUARE OR (14) 2-3/8" ROUND HOLES, EQUALLY SPACED. ROWS SHALL BE SPACED 6-1/2" CENTER TO CENTER.
5. GRAVEL BACKFILL FOR DRYWELLS PER WSDOT STANDARD SPECIFICATION 9-03.12(5).
6. UNDERGROUND DRAINAGE GEOTEXTILE, MODERATE SURVIVABILITY. PER WSDOT STANDARD SPECIFICATION 9-33.
7. TYPICAL DRYWELL DEPTH IS 13'

PRECAST DRYWELL
NTS

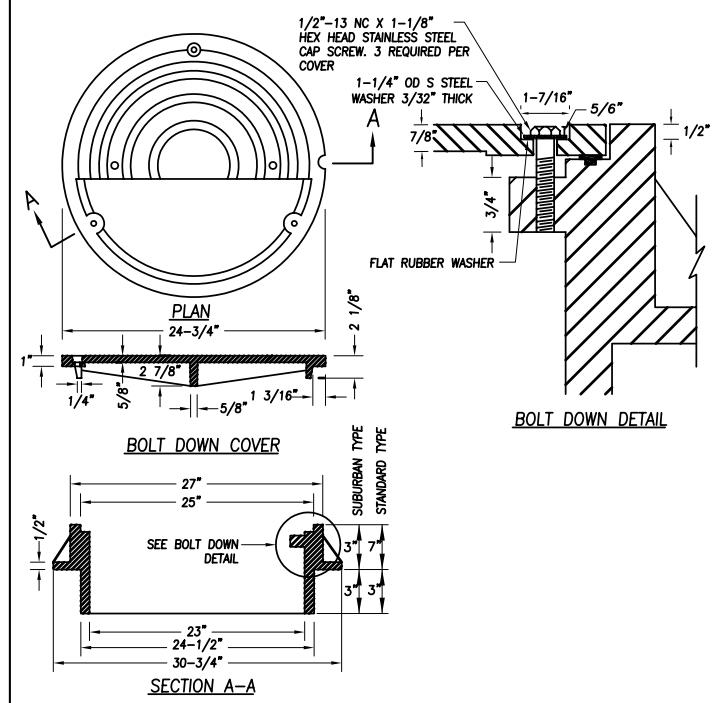

NOTES:
1. USE TAMPER-PROOF COVER IN UNIMPROVED AREAS ONLY.
2. COVER MATERIAL TO BE DUCTILE IRON ASTM A536 GRADE 80-55-06
3. FRAME MATERIAL TO BE GRAY CAST IRON ASTM A-48 CLASS 30.
4. COVER AND FRAME TO BE MACHINED TO A TRUE BEARING ALL AROUND.
5. NOTCH LID FOR LIFTING HOOK.

STANDARD TAMPER-PROOF COVER AND FRAME
NTS

By	APPR.	DATE	No.	REVISIONS
MBC		8/03		APPROVED (CD VERSION 1.1)
MBC		10/03		APPROVED (CD VERSION 1.2)

DESIGNED	EB/LF
DRAWN	BS
CHECKED	JG
APPROVED	MBC

SCALE: HOR. NTS; VERT. NTS; FIELD BOOK N/A

JOB NUMBER	CITY OF WASHOUGAL	DRAWING NUMBER
DATE	STANDARD STORM DRAINAGE DETAILS – SHEET 1	SHEET of